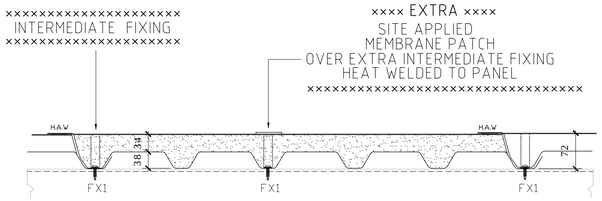

INTERMEDIATE PANEL FIX ZONE A

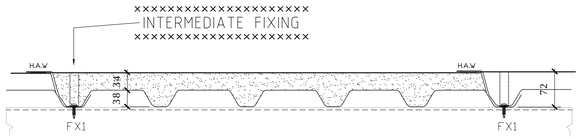

INTERMEDIATE PANEL FIX ZONE B

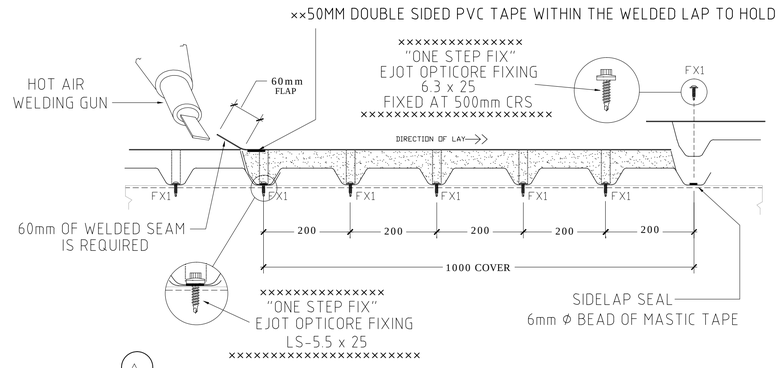

TYP PANEL SIDE LAP FIX

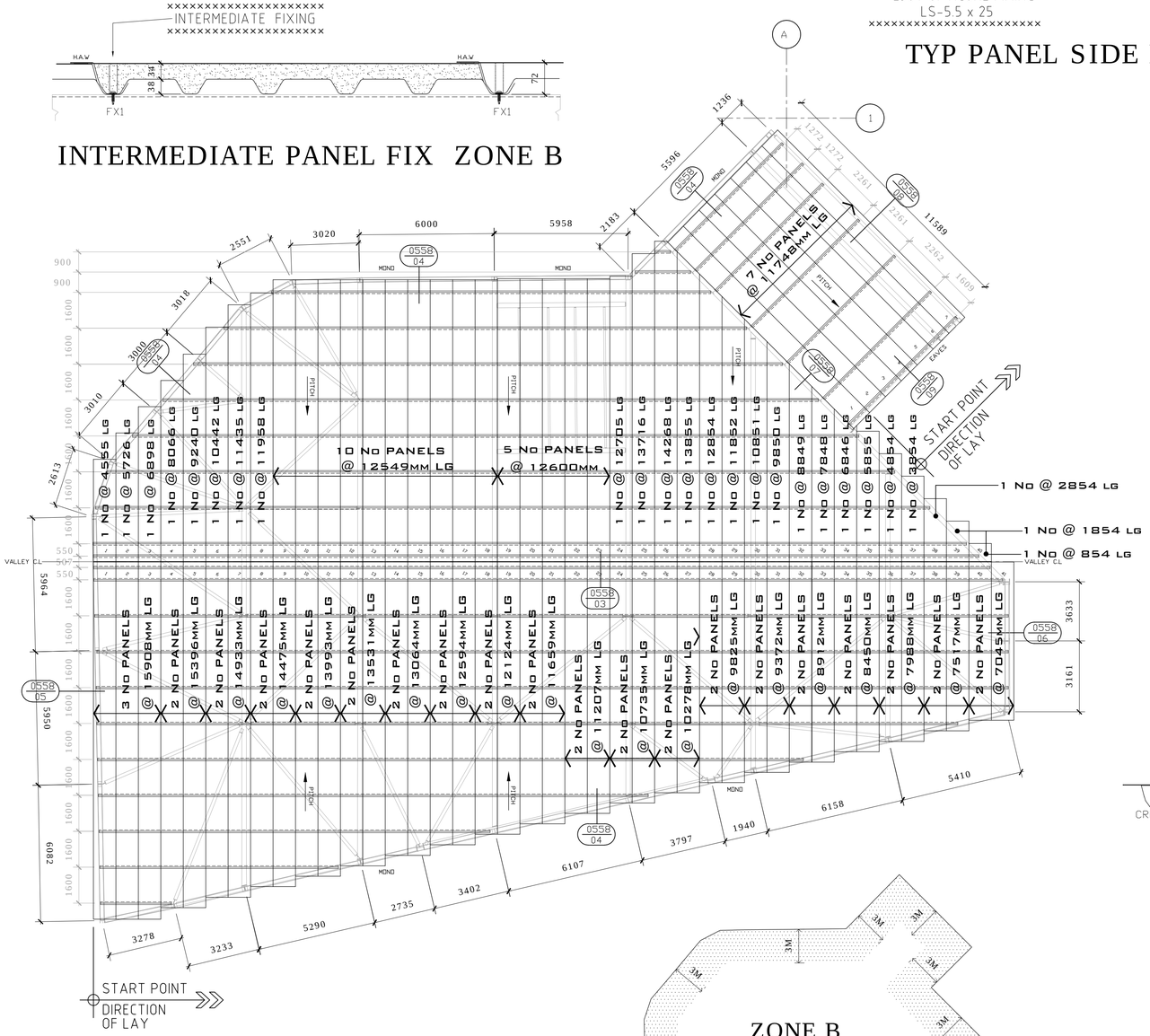

TOP DECK ROOF PLAN

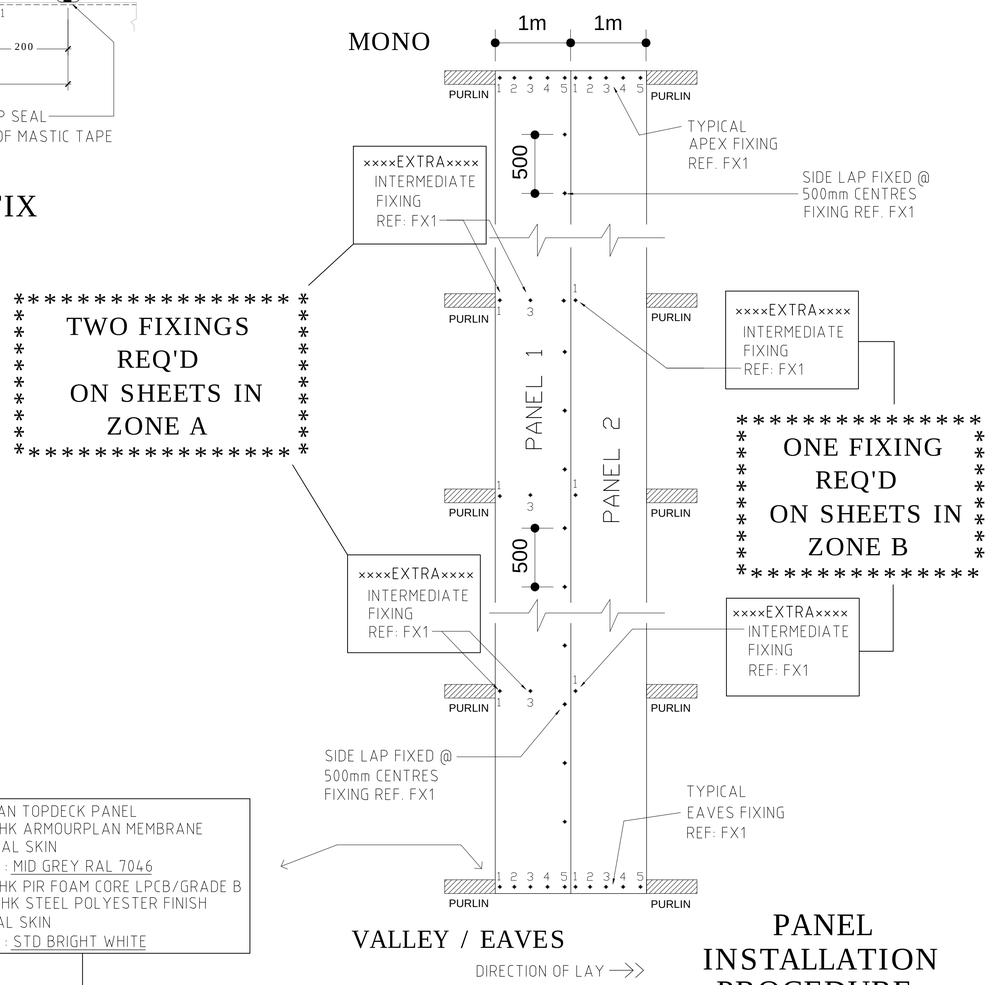

VALLEY / EAVES

PANEL INSTALLATION PROCEDURE

****
* TWO FIXINGS *
* REQ'D *
* ON SHEETS IN *
* ZONE A *
****

****
* ONE FIXING *
* REQ'D *
* ON SHEETS IN *
* ZONE B *
****

KINGSPAN TOPDECK PANEL
1.2mm THK ARMOURPLAN MEMBRANE
EXTERNAL SKIN
COLOUR : MID GREY RAL 7046
34mm THK PIR FOAM CORE LPCB/GRADE B
0.7mm THK STEEL POLYESTER FINISH
INTERNAL SKIN
COLOUR : STD BRIGHT WHITE

PANEL CROWN

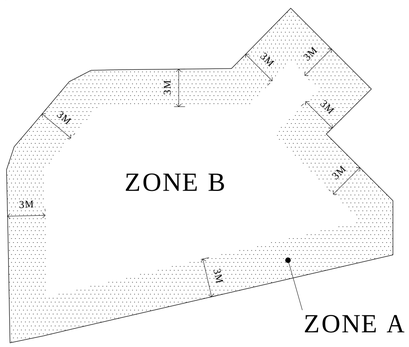

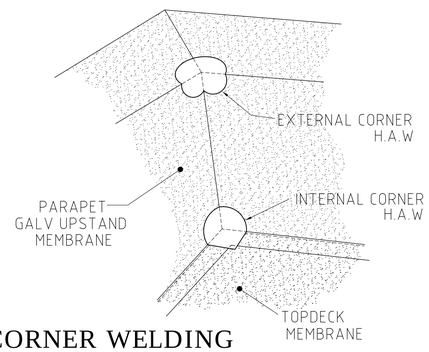

CORNER WELDING

REVS	ALL DIMENSIONS IN MILLIMETRES U.N.O	
A	UPDATED & PANAL SIZES ADDED	29.7.11
	CONSTRUCTION ISSUE	

MASSEY CLADDING SOLUTIONS LTD. TOTAL ROOF & WALL CLADDING SOLUTIONS

TEL : 01275 464372 FAX : 01275 464863

Client: DUDLEY CONSTRUCTION	Architect: C.H.Q Architects
Project: Sainsburys I.O.W	Scale: 1:100 @ A1
Title: PHASE 1 ROOF PLAN & FIXING DETAILS	Rev: A
	Date: 04/07/11
	Drawn: S J Small
	Drawing No.: 0558-01