PATCH TYPE
W.O : WEIR OVERFLOW
RWP : RAIN WATER PIPE

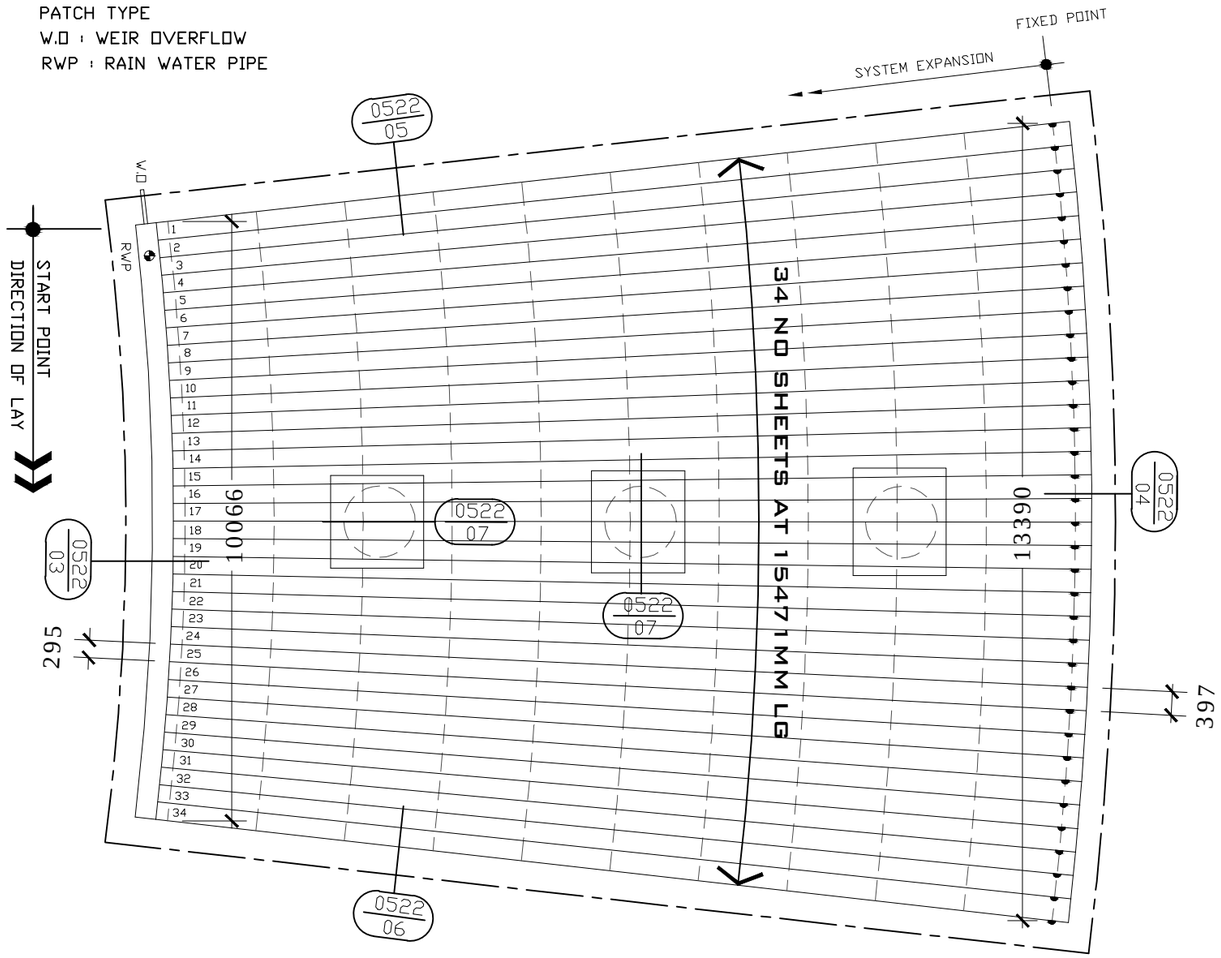


PLAN ON KAL-ZIP SHEETS

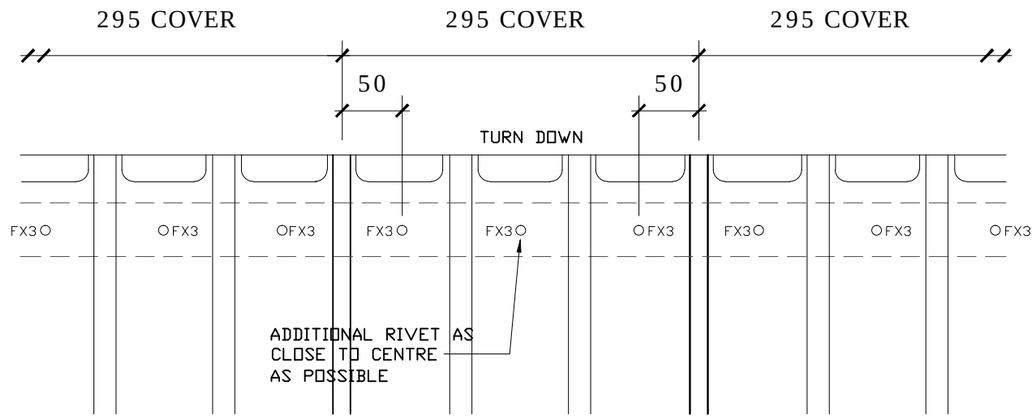


EAVES FOLDING / DRIP ANGLE FIXING

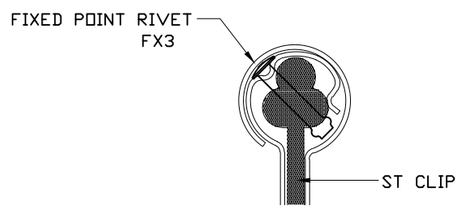


FIXED POINT DETAIL

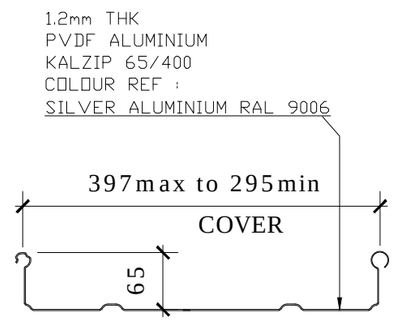


TYP KAL-ZIP SHEET

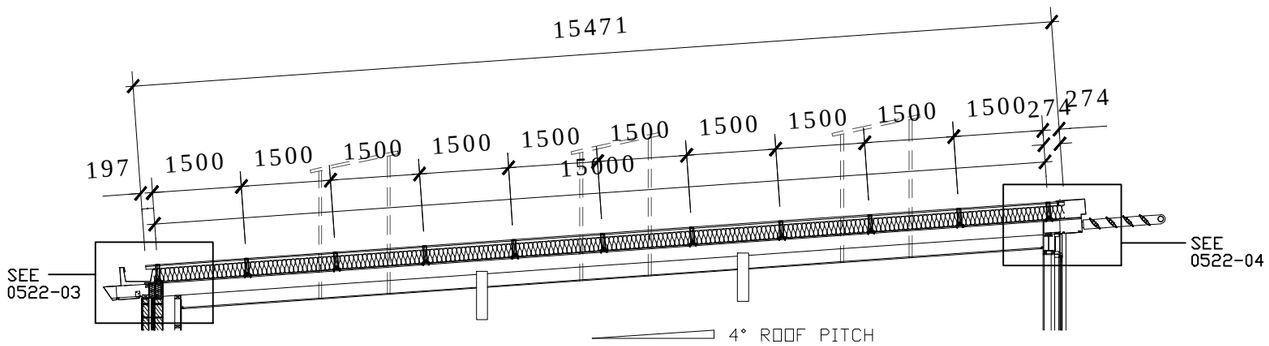


TYPICAL SECTION THROUGH

| REVS | ALL DIMENSIONS IN MILLIMETRES U.N.O | |
|---|---|---|
| A | CONSTRUCTION ISSUE | 10/09 |
| | *CONSTRUCTION ISSUE* | |

**MASSEY CLADDING SOLUTIONS LTD.**
TOTAL ROOF & WALL CLADDING SOLUTIONS
TEL : 01275 464372 FAX : 01275 464863

| | | |
|---|---|---|
| Client: COWLIN | Architect: PROPERTY SERVICES | Scale: NTS @ A3 |
| Project: COURTNEY PRIMARY SCHOOL | | A |
| Title: MAIN HALL KAL-ZIP PLAN & DETAILS | Date: 25/09/09 | Drawing No. 0522-01 |
| | Drawn: SJ Small | |